CREST RS80

使用说明书

User Manual

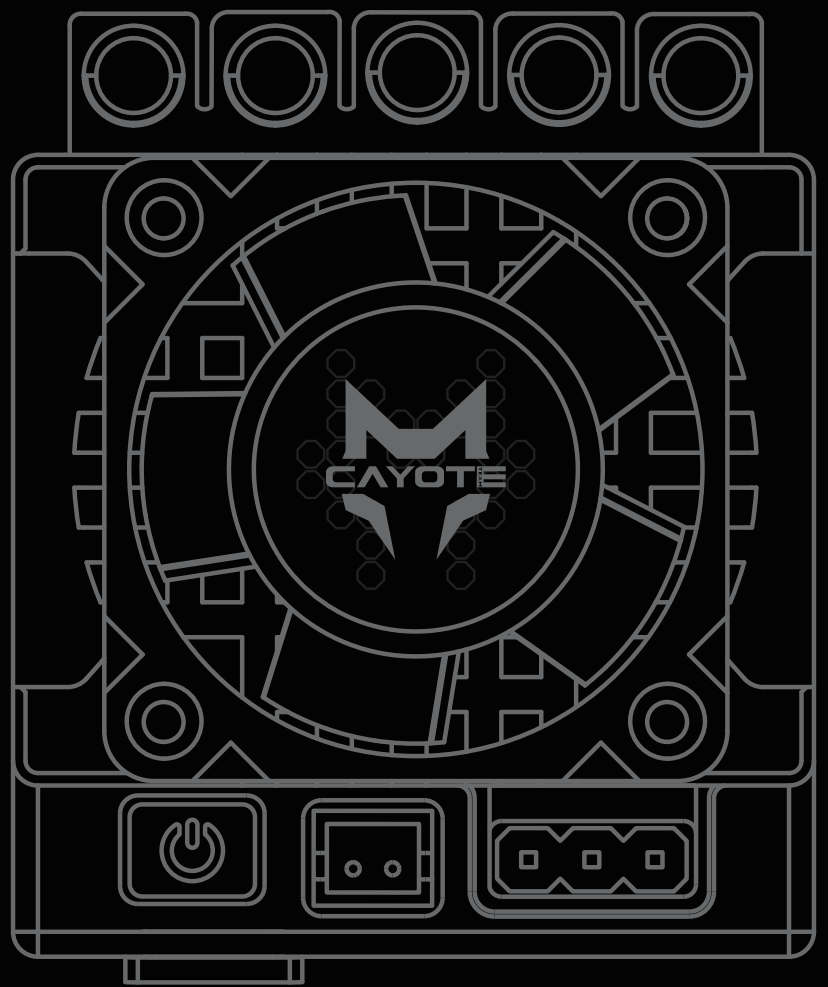

CAYOTE TEAM

Contents

01-Caution ---------- 03

02-Features ---------- 04

03-Specifications ---------- 05

04-Connections ---------- 06

05-ESC Setup ---------- 07

- 05-1.ESC Calibration Process ---------- 08
- 05-2.Switch On/Off and Beeping ---------- 09
- 05-3.Programmable Items ---------- 10
- 05-4.Preset Modes ---------- 15
- 05-5.ESC Programming ---------- 16
- 05-6.Factory Reset ---------- 16

06-LED Indicator Guide ---------- 17

07-Troubleshooting ---------- 17

目录

01-注意事项 ---------- 21

02-产品特色 ---------- 21

03-产品规格 ---------- 22

04-连接电子调速器 ---------- 23

05-设置电子调速器 ---------- 24

05-1.设定油门行程 ---------- 24

05-2.开关机及鸣音说明 ---------- 25

05-3.编程项目说明 ---------- 26

05-4.预设模式 ---------- 30

05-5.编程方法 ---------- 31

05-6.恢复出厂参数设定 ---------- 31

06-电调状态指示灯(LED)说明 ---------- 32

07-故障快速处理 ---------- 32

01 Caution

1. Before connecting the ESC to the relevant connection parts, please make sure that all the wires and connection parts are well insulated. A short circuit will damage the ESC.
2. Please be sure to connect all parts carefully. If the connection is not good, you may not be able to control the car normally, or unpredictable situations such as equipment damage may occur.
3. Before using the ESC, please carefully review the power equipment and the manual of the chassis to ensure that the power configuration is reasonable, this to avoid overloading the motor due to wrong power configuration and eventually damage the ESC.
4. If you need to weld the input and output wires and plugs of the ESC, to ensure reliable welding, please use welding equipment with a power of at least 60W.
5. During high-speed operation, the tires of the car will "inflate" to the extreme, so please do not drive the car unnecessarily to full speed, the tires may burst and cause serious injury.
6. Do not place the ESC or motor where the external temperature exceeds 90°C/194°F. High temperature will damage the ESC and motor.
7. After use, remember to cut off the connection between the battery and the ESC. If the battery is not disconnected, the ESC will continue to consume power even if the switch of the ESC is turned off. If the battery is connected for a long time, the left-over energy will eventually be completely consumed, which will cause the battery or the ESC to malfunction. We are not responsible for any damage caused thereby.

02 Features

1. Zero-Timing ESC for Racing: Fixed 0-degree timing angle, non-adjustable. Ensures consistent power output when using designated motors, effectively maintaining fairness in competitive power systems.
2. Built-in Large Capacitor: Eliminates the need for an external capacitor pack, saving installation space and allowing for easier wiring and layout.
3. Multiple Protection Features: Includes low voltage protection, ESC and motor overheat protection, and stall protection.
4. Built-in Reverse Polarity Protection: Prevents damage to the ESC or battery caused by incorrect polarity connections.
5. Offline Data Logging: Allows users to retrieve maximum ESC and motor temperature, as well as peak RPM levels, using an LCD programming box.
6. Wide-Range RPM Limit Setting: Supports flexible RPM limit adjustments to meet different racing requirements, configurable via a programming box or mobile app.

03 Specifications

Model	CREST RS80
Continuous/Peak current	80A/400A
Support motor type	Sensored and sensorless brushless motor
Suggested application	Stock Class of 1/10th Touring car & Buggy
Motors	≥10.5T 3650 size motors
Number of battery cells	2S Lipo
BEC output	Ultra-stable switch V regulation 6V/7.4V; cont.current 4A/5A peak
Fan power	Obtain a stable 6V/7.4V from the built-in BEC
Dimension/weight	37.8(L)*32(W)*28.5(H) mm/45g
Parameter setting method	Xlink Programming Box/ APP

04 Connections

Please refer to the instructions and wiring diagram for correct wiring:

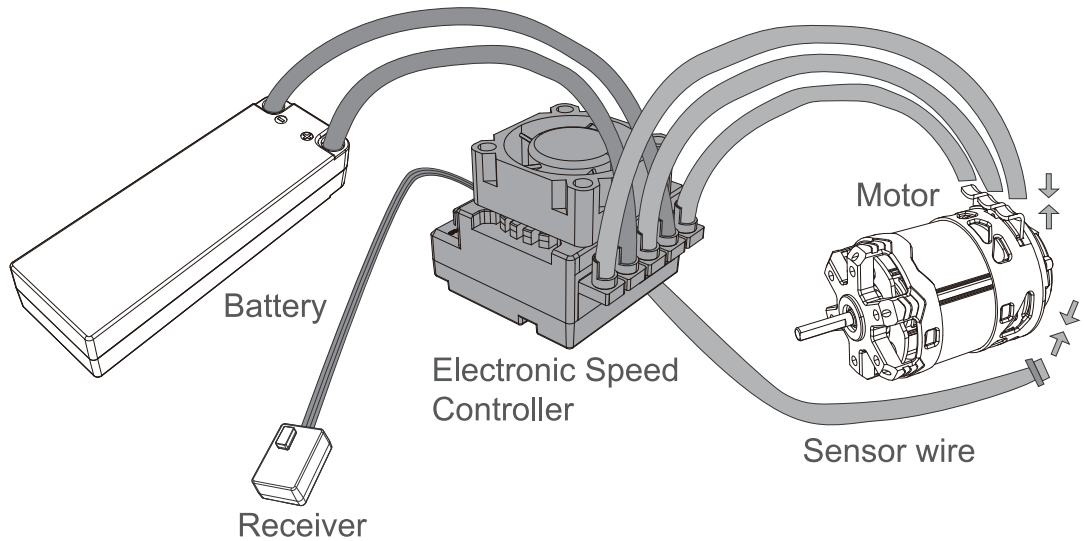

1.Connect the motor:

There are differences in the way to connect the sensor brushless motor and the sensorless brushless motor, please be sure to follow the wiring method as follows:

Option 1. When connecting a sensored brushless motor:

The ESC and motor must be connected in a strictly corresponding sequence: the ESC's #A/#B/#C terminals must align exactly with the motor's #A/#B/#C terminals. Additionally, use a six-pin sensor wire to connect the ESC to the motor's sensor port.

Note: If the vehicle moves in reverse after installing the motor, adjust the "Motor Rotation Direction" parameter to correct the motor's rotation direction.

Option 2. When connecting a sensorless brushless motor:

The ESC and motor do not have a strict wiring sequence requirement. The ESC's #A/#B/#C terminals can be connected to the motor's three wires in any order.

Note: If the motor runs in the opposite direction, simply swap any two motor wires to correct the rotation direction.

2.Connect the receiver:

Insert the throttle control cable of the ESC into the throttle channel of the receiver. Because the red wire in the cable outputs 6V/7.4V voltage to the receiver and steering gear, please do not provide additional power to the receiver, otherwise it may damage the ESC.

3.Connect the battery

The input wires of the ESC have polarity. When inserting the battery, please make sure that the (+) pole of the ESC is connected to the (+) pole of the battery, and the (-) pole is connected with the (-) pole. If the ESC is connected to the battery cross connected, the ESC will not be able to power on.

05 ESC Setup

Warn!

This system is highly powerful. For your safety and the safety of those around you, we strongly recommend removing the motor pinion gear before calibrating or configuring the system. Additionally, ensure the vehicle's wheels are off the ground before turning on the ESC!

1 Set the Throttle Range - ESC Calibration Process

When using the ESC for the first time or after adjusting the transmitter’ s throttle “TRIM,” D/R, EPA, or other related parameters, you must recalibrate the throttle range. Failure to do so may result in malfunction or improper operation.

Additionally, we strongly recommend enabling the fail-safe function on the transmitter. Set the throttle channel’ s fail-safe (F/S) function to either disable output or neutral throttle position. This ensures that if the receiver loses signal from the transmitter, the motor will stop running.

Throttle calibration steps are shown in the figure below:

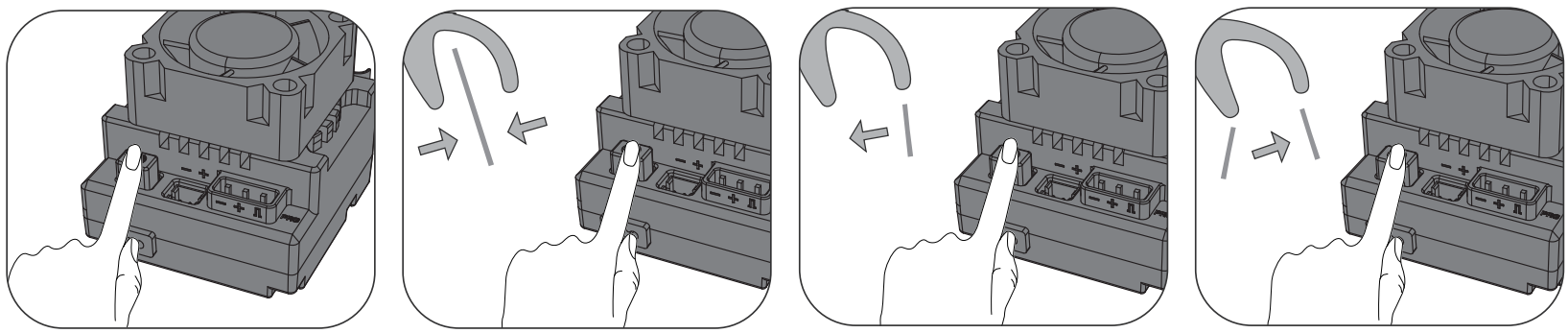

Step 1

Push button more then 5 seconds and release = one large beep followed by multiple short beeps; ESC is ready to start calibration.

Step 2

Neutral Point calibration = short press the power on button; esc confirms with 1 short beep.

Step 3

Throttle High point calibration = pull and hold the throttle lever on full power, then short press power on button; esc confirms with 2 short beep.

Step 4

Brake High point full calibration = push and hold the brake lever on full brake, then short press power on button; esc confirms with 3 short beeps, and 2 normal beeps.

With the ESC turned off, press and hold the power button until there is a beep and release it. At this time, the ESC is in the state of remote control waiting to be set. Put the throttle trigger in the middle position of the throttle, short press the power button, and the ESC beeps. 1 beep, put the trigger at full throttle in the forward direction, short press the power button, the ESC beeps 2 times, put the trigger at full throttle in the reverse direction, short press the power button, and the ESC beeps 3 times.

2 Switch On/Off and Beeping

1)Power On/Off Instructions:

In the powered-off state, short press the ON/OFF button to turn on.
In the powered-on state, long press the ON/OFF button to turn off.

2)Startup Beep Explanation:

Under normal conditions, when powered on, the motor will emit beeping sounds to indicate the number of LiPo cells.

For example:

"Beep beep" indicates a 2-cell LiPo.
"Beep beep beep" indicates a 3-cell LiPo.

3 Programmable Items

Type	Items	Setting Options			
General Settings	Running Mode	Fwd/Brk	Fwd/Rev/Brk	Fwd/Rev	
	Max.Reverse Force	20%	30%	40%	
	Cutoff Voltage	Disable	Auto(3.5V/cell)	4.0V~7.4V Adjustable (Step: 0.1V)	
	ESC Thermal Protection	Disable	Enable		
	Motor Thermal Protection	Disable	Enable		
	BEC Output Voltage	6.0V	7.4V		
Throttle Control	Throttle Curve	Linear			
	Neutral Range	4%	6%	8%	10%
	RPM Limit	10K~88K RPM Adjustable (Step: 1K RPM)		Unlimited	
Brake Control	Brake Control	Slowly		Heavy	
	Max.Brake Force	0%~100% Adjustable (Step: 1%)			

Note:
The ESC firmware may be updated in future releases, which could result in changes to the available parameter settings in the app. Please refer to the actual software version for the most accurate and up-to-date programming options.

1. **Running Mode**

   Option 1: Forward with Brake

   Racing mode. It has only forward and brake functions, as used in professional competition racing. Reverse mode is disabled.

   Option 2: Forward/ Reverse with Brake

   This mode provides a reverse function and is usually used for training. The "forward and reverse with brake" mode adopts the intelligent reverse mode. When the accelerator trigger is pushed from the midpoint area to the reverse area for the first time, the motor will brake. When the accelerator trigger returns to the midpoint area and is pushed to the In the reverse zone, if the motor has stopped at this time, a reverse action will occur. If the motor has not stopped, it is still braking, and the accelerator trigger needs to be returned to the midpoint and pushed to the reverse zone. The purpose of doing this is to prevent accidental reversing due to multiple point brakes during vehicle driving.

   Option 3: Direct forward and reverse

   This mode adopts single-click reverse mode, that is, when the throttle stick is pushed from the midpoint area to the reverse area, the motor will immediately generate a reverse action. This mode is generally used for special vehicles like crawler.

2. **Max. Reverse Force**

   It refers to the maximum reverse force that can be produced when the throttle stick is pushed to the maximum reverse position. Different parameter values can be selected to produce different reverse speeds (generally, it is recommended to use a relatively small reverse speed to avoid mistakes due to too fast reverse).

3. **Cutoff Voltage**

This function is mainly to prevent irreversible damage caused by excessive discharge of lithium batteries. The ESC will monitor the battery voltage at all times, once the voltage is lower than the set threshold, the ESC will immediately reduce the power to 20%. After entering the voltage protection, the red LED will continue to flash with "☆, ☆, ☆, ☆...". If you use NiMH batteries, please set it to "no protection" or customize the protection threshold.

Option 1: No protection

When set to no protection, the ESC will not cut off the power due to low voltage. When using a lithium battery, it is not recommended to set it to "Unprotected", otherwise the battery may be damaged due to excessive discharge. In order to avoid the power drop caused by entering the protection state during the competition, it is recommended to set it to "no protection" (but the battery may be damaged due to over-discharge, which will lead to cell inflation).

Option 2: Auto detection

The ESC automatically calculates the corresponding low-voltage protection threshold based on the detected number of lithium cells and 3.5V/Cell. For example, when the detection uses 2S, the low-voltage protection threshold is 3.5x2=7.0V.

Option 3: Customized

When customizing Settings, the low voltage protection threshold of ESC ranges from 4.0V to 7.4V (adjusted value 0.1V), where the voltage value is for the entire battery pack, that is, the total input voltage. Please calculate the low voltage protection thresh

old you need according to the number of batteries used. The custom value can be set at will. The minimum value can be set to 4.0V, the maximum value can be set to 7.4V.

4. **ESC Thermal Protection**

   When the temperature rise of the ESC reaches a specific value preset by the factory, the output will be automatically turned off, and the red light will flash, and the output will not resume until the temperature drops. When the ESC is under overheating protection, the red light flashes three times: ☆☆☆, ☆☆☆,... Warning! Do not turn off the overheating protection of the ESC unless it is a competition occasion, otherwise the ESC may be damaged due to overheating, and the motor may be damaged.

5. **Motor Thermal Protection**

   When the motor temperature rises to a certain value preset by the factory, the ESC will automatically turn off the output, and the red light will flash, and the output will not resume until the motor temperature drops. When the motor is overheated, the red light flashes in quads flashes: ☆☆☆☆,☆☆☆☆, ... Warning! Do not turn off the motor overheating protection unless it is a competition occasion, otherwise the motor may be damaged and the ESC may be damage.

6. **BEC Voltage**

   BEC voltage support 6.0V/7.4V adjustable, generally 6.0V is suitable for ordinary steering gear; If the high voltage steering gear is used, it can be set to a higher voltage. For details, please refer to the steering gear voltage label; Warning! The BEC voltage set should not exceed the maximum operating voltage of the steering gear, or it may damage the steering gear and even damage the electrical regulation!

7. **Throttle Curve**
   This parameter adjusts the relationship between the throttle stick input and the ESC's actual throttle output.
   By default, it is linear, meaning the power output directly corresponds to the throttle input.

8. **Neutral Range**
   This parameter adjusts the range of the midpoint of the throttle to suit different remote controllers and drivers' control habits. Some poor-quality remote controllers tend to drift in the midpoint position, causing the car to move forward or backward slowly. When this phenomenon occurs, please set the area width to a larger value.

9. **RPM Limit**
   This parameter sets the maximum motor RPM, following the relevant race regulations.
   Note: The set RPM limit applies to 2-pole motors. If using a 4-pole motor, divide the set value by 2 to get the actual RPM.
   For example, to achieve 20,000 RPM with a 4-pole motor, the setting should be 20,000 × 2 = 40,000, so the RPM limit should be set to 40,000.

10. **Brake Control**
    There are two braking modes: slow braking for entertainment and heavy braking for competition.

11. **Max. Brake Force**
    This ESC provides a proportional braking function. The braking force is related to the position of the throttle stick. The maximum braking force refers to the braking force generated when the throttle stick is at the brake limit position. Please select the appropriate

maximum braking force parameter according to the specific conditions of the vehicle and the track and your personal habits.

4 Preset Modes

In order to make a program can be quickly adapted to a variety of applications, the battery preset 5 groups of common modes. Under normal circumstances, customers only need to directly call the relevant mode, and then match the appropriate tooth ratio according to different motors to meet the general requirements of use, plug and play, without having to carefully study the actual function of each parameter. Of course, users can also change the Settings of each mode according to their own control habits and venues and other factors.

Preset Mode Applicable Occasions:

No.	Items	Applications
1	Blinky	Suitable for STOCK racing that requires ESCs to use a zero-timing blinking light program.
2	1/10 Off-Road	Suitable for 1/10 off-road/truck racing
3	1/10 On-Road	Suitable for 1/10 on-road racing

5 ESC Programming

Notice! The ESC programming interface is an independent programming port; do not use the throttle control cable on the ESC to connect the programming box, otherwise the programming box will not work.

LCD programming box for parameter setting: (For details, please refer to the manual of the LCD parameter programming box) This ESC supports using the LCD programming box to set parameters. After connecting the ESC and the programming box with a 3pin cable, and then connecting the power to the ESC, the LCD setting box will display the startup interface. Use the "ITEM" and "VALUE" buttons to change the setting parameters, and press the "OK" button to save the setting parameters into the ESC.

6 Factory Reset

After connecting the LCD box, select "Restore Default" through "ITEM", then press "OK" to save, and wait for 2 seconds to restore the factory settings.

06 LED Indicator Guide

1.Startup Phase

No control signal: Green light flashes once, accompanied by one beep.

2.Operation Phase

Low voltage: Red light flashes twice, accompanied by two beeps.
ESC overheating: Red light flashes three times, accompanied by three beeps.
Motor overheating: Red light flashes four times, accompanied by four beeps.
Motor overcurrent: Red light flashes five times, accompanied by five beeps.

07 Troubleshooting

Symptom	Possible cause	Solution
After power on, the indicator light is off, the motor cannot be started, and the fan does not turn.	1.The battery voltage is not input to the ESC. 2.The ESC switch is damaged. 3.The positive and negative poles of the ESC are reversed.	1.Check whether the connecting wire is defective or not, and whether the solder joint is defective. 2.Replace the switch. 3.Adjust the positive and negative poles.

After the power is turned on, the motor cannot be started, and the warning sound of "beep - beep-, beep-beep -" is issued with a red light flashing (the interval between each group of double tones is 1 second).	Battery pack voltage is out of normal range.	Check battery pack voltage.
After power-on, the lithium section is detected (after the green light flashes quickly, the green light flashes single-all the time, and the motor emits a ringing sound).	1.The ESC does not detect the throttle signal. 2.The midpoint of the ESC throttle does not match the remote control.	1. Check whether the throttle cable is inserted backwards, whether the channel is inserted incorrectly, and whether the controller is turned on. 2. Return the throttle stick to the neutral position and recalibrate the throttle stroke.
The remote control increases the accelerator, but the car reverses.	The frame is inconsistent with the motor steering of the mainstream frame.	Set the motor rotation setting to "CW clockwise".
During the rotation of the motor, it suddenly stops or the power output is significantly reduced.	1.The receiver encounters interference. 2.The ESC enters the battery low voltage protection state.	1. Check the cause of interference in the receiver and check the battery power of the transmitting machine. 2. The red light blinks twice at

	3.The ESC enters the over-temperature protection state.	intervals for voltage protection. Please replace the battery. 3. The red light flashes 3 times at intervals for temperature protection, please continue to use after the electric regulator \ motor temperature decreases.
The motor shakes and cannot be started.	1.The plug of the electric harmonic motor connection has virtual welding or AC line interchange. 2.ESC failure (some power tube MOSFETs burnt out).	1.Check each welding point, re-weld if necessary, and swap AC lines. 2.Contact the buyer to deal with maintenance matters.
Moving forward normally, but unable to reverse.	1.The midpoint of the accelerator channel of the remote control deviates from the braking area. 2.The parameter item "Run Mode" is set incorrectly 3.The ESC is damaged.	1.Readjust the midpoint of the throttle channel so that when the throttle stick of the remote controller is in the middle position, the indicator light on the ESC will not light up. 2.The parameter item "running mode" needs to be set to "forward and reverse with brake". 3.Contact the buyer to deal with maintenance matters.

Connect the LCD parameter setting box, always display "CONNECTING ESC".	1.Improper use of ESC programming interface. 2.ESC throttle is not reset to zero.	1.Use the correct interface to connect the LCD setting box. 2.Restart the ESC and reconnect the LCD parameter box.
When setting the throttle range, when pressing the SET button to set the midpoint, the green light does not flash and there is no "beep" sound, or after the midpoint is set, the forward and reverse maximum points cannot be set.	1. The ESC throttle cable is not inserted into the correct channel of the receiver. 2. The ESC throttle cable is inserted backwards. 3. The forward and reverse travel setting of the throttle is not set to 100%.	1. Insert the throttle cable into the TH channel marked on the receiver. 2. Check that the sequence of the receiver markings is inserted correctly. 3.Throttle forward and backward travel is set to 100%.

01 注意事项

1. 电调与相关连接部件连接前，请确保所有电线和连接部件绝缘良好，短路会损坏电调。
2. 请务必仔细连接好各部件，若连接不良，您可能不能正常控制赛车，或出现设备损坏等不可预知的情况。
3. 使用电调前，请认真查看各动力设备以及车架说明书，确保动力搭配合理，避免因错误的动力搭配导致电机超载，最终损坏电调。
4. 若需对电调的输入输出线、插头做相关焊接时，为保证焊接牢靠，请使用至少 60W 功率的焊接设备进行焊接。
5. 高速运行中，因车子轮胎会“膨胀”到极致，故而请勿将车子腾空后加至全速，否则，轮胎可能爆裂而引起严重伤害。
6. 请勿将电调或者电机放置外部温度超过 90°C/194°F，高温将会损坏电调、电机。
7. 使用完毕后，切记切开电池与电调的连接。如电池未断开，即使电调开关处于关闭状态，电调也会一直消耗电能，长时间连接电池最终也会被完全消耗电能，进而导致电池或电调出现故障。我们不对因此而造成的任何损害负责。

02 产品特色

1. 零进角类比赛适用电调，0 度固定进角值，不可调整。保证公发马达下，车辆动力输出一致，有效保证竞赛动力系统性能公平性。
2. 电调内置大电容 , 省去外挂电容包节约安装空间 , 方便布局布线。

3. 多重保护功能：电压过低保护、电调及电机过热保护，堵转保护。
4. 内置防反接保护，无需担心正负电源接反引起损坏电调或电池。
5. 离线数据记录功能，可以通过 LCD 设定盒读取电调和电机的最高温度，最高转速等级值数据。
6. 支持宽范围 RPM 限速设置，满足不同比赛需求，通过编程盒或 APP 设置。

03 产品规格

型号	CREST RS80
持续/峰值电流	80A/400A
支持电机类型	无感无刷电机、有感无刷电机
主要适用车型	1/10电房/电越的专业STOCK竞赛
支持无刷马达KV	≥10.5T 3650电机
电池节数	2S Lipo
BEC输出	超稳定电压6V/7.4V，持续电流4A，峰值电流5A(开关稳压方式)
风扇取电方式	从内置BEC取得稳定的6V/7.4V供电
尺寸/重量	37.8(长)*32.0(宽)*28.5(高) mm/45g
参数设定方式	Xlink多功能LCD编程盒/ APP

04 连接电子调速器

请参照说明及接线图正确接线：

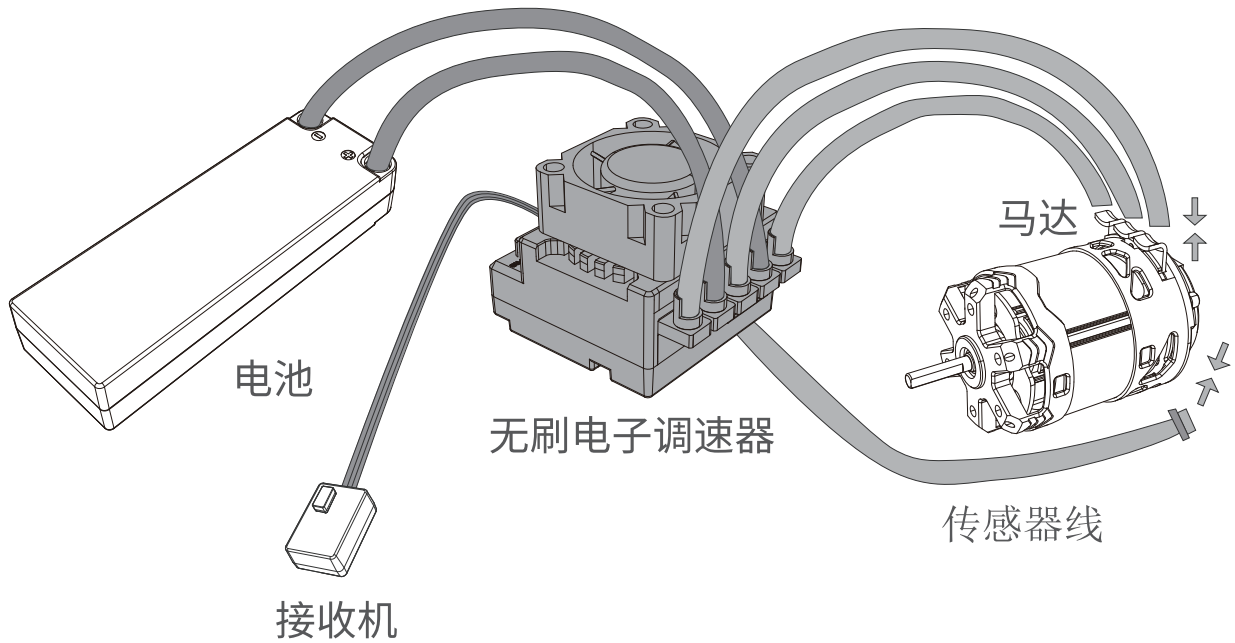

1. 连接马达：

连接有感无刷马达与无感无刷马达的方式差异，请务必遵照如下接线方式：

选项一、连接有感无刷马达时：

电调与马达连接有严格的线序要求，电调的 #A/#B/#C/ 必须与电机的 #A/#B/#C 三线严格一一对应，用六针感应线把电调与电机的感应接口对接。

注意：若装上电机后，车子前进与后退反向，请更改参数“电机转动方向”，实现电机转向调整。

选项二、连接无感无刷马达时：

电调与马达相连无严格的线序要求，电调的 #A/#B/#C 可以与电机的三线随意对接，若出现转向相反，任意交换两条马达线即可。

2. 连接接收机：

将电调的油门控制排线插入接收机的油门通道（即 THROTTLE 通道）。因为排线中的供电线输出 6V/7.4V 电压给接收机及舵机，所以请勿给接收机额外供电，否则可能损坏电调。

3. 连接电池

电调的输入线有极性之分，插入电池时，请确保电调的（+）极与电池的（+）相连，(-) 极与 (-) 极相连，如果电调与电池接反，电调将无法开机。

05 设置电子调速

警告！ 本系统功率强劲，为了您及周边他人的安全，我们强烈建议您在校准及设定该系统前拆下电机小齿，并在车轮悬空的情况下开启电调开关！

1 设定油门行程

电调第一次使用或遥控器更改过油门“TRIM”微调、D/R、EPA 等参数后，均需重设油门行程，不然可能会导致无法使用或误动作。另外我们强烈建议同时开启遥控器的失控保护功能，将

遥控器油门通道的无信号保护（“F/S”）功能设置为关闭输出方式或将保护值设置为油门中立点位置，使得当接收机无法收到遥控器信号后，电机能够停止运转。

油门校调步骤如下图所示：

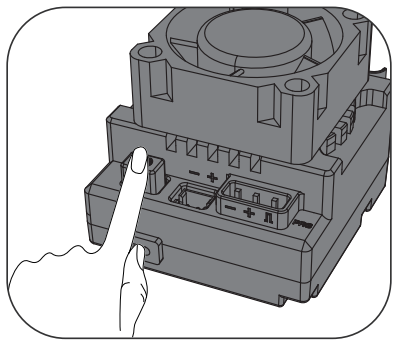

将电调处于关机状态，长按电源键，直至发出滴的一声鸣音后松开。

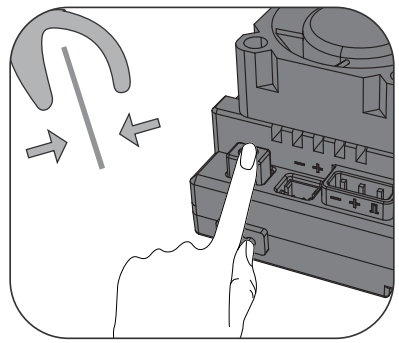

将油门扳机处于油门中位，短按一下电源键，电调鸣音1声。

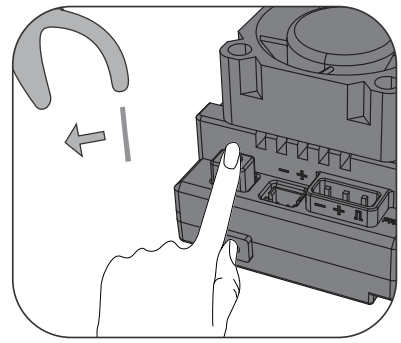

将扳机处于正向全油门，短按一下电源键，电调鸣音2声。

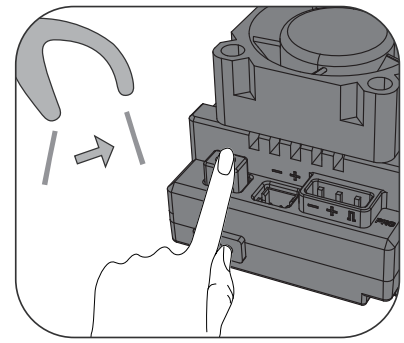

将扳机处于反向全油门，短按一下电源键，电调鸣音3声。

将电调处于关机状态，长按电源键，直至发出滴的一声鸣音后松开，这时电调处于遥控待设置状态，将油门扳机处于油门中位，短按一下电源键，电调鸣音 1 声，将扳机处于正向全油门，短按一下电源键，电调鸣音 2 声，将扳机处于反向全油门，短按一下电源键，电调鸣音 3 声。

2 开关机及鸣音说明

1) 开关机说明：

关机状态下短按 ON/OFF 键开机；开机状态下长按 ON/OFF 键关机

2) 开机鸣音说明：

在正常情况下开机，电机会发出几声“哔”鸣音表示锂电节数。例如：“哔哔”表示 2 节锂电，“哔哔哔”表示 3 节锂电

3 编程项目说明

类别	设定项目名称	设定项值			
一般设置	运行模式	正转带刹车	正反转带刹车	直接正反转	
	最大倒车力度	20%	30%	40%	
	低压保护阈值	不保护	自动(3.5V/节)	4.0V~7.4V可调 (调整量0.1V)	
	电调过热保护	不保护	保护		
	电机过热保护	不保护	保护		
	BEC输出电压	6.0V	7.4V		
油门控制	正向油门曲线	线性			
	油门中点范围	4%	6%	8%	10%
	RPM限速值	10K~88K RPM可调 (可调量为1K RPM)不限速			
刹车	刹车模式	缓刹车		重刹车	

刹车	最大刹车力度	0%~100%可调 (调整量为1%)

注意：由于电调的固件可能会在后续版本中进行升级，APP 中的可调参数项可能会有所变动。请以当前软件版本中的实际显示内容为准进行设置。

1. **运行模式 (Running Mode):**

   选项 1：正转带刹车

   此模式下，车辆仅能前进和刹车，但不能倒车，该模式通常用于竞赛。

   选项 2：正反转带刹车

   此模式则提供了倒车功能，通常用于训练。“正反转带刹车”模式采用的是智能倒车方式，当油门扳机第一次从中点区域推至反向区域时，电机将产生刹车，当油门扳机回到中点区域并第二次推至反向 区域时，如果此时电机已停转，则产生倒车动作，如果电机未停转，仍是刹车，需要再次将油门扳机回到中点并推至反向区域。这样做的目的是防止车辆行驶过程中因多次点刹而造成误倒车。

   选项 3：直接正反转

   此模式采用单击式倒车方式，即油门摇杆从中点区域推至反向区域时，电机立即产生倒车动作，该模式一般用于特种车辆。

2. **最大倒车力度 (Max. Reverse Force):**

   指油门摇杆打到反向最大的位置所能产生的最大倒车力度，选择不同的参数值可以产生不同的倒车速度 (一般情况下推荐使用比较小的倒车速度，以免因倒车太快而导致失误)。

3. **电池低压保护阈值 (Cutoff Voltage):**

这项功能主要是防止锂电池过度放电而造成不可恢复的损坏。电调会时刻监视电池电压，一旦电压低于设定的阈值，电调立即将动力降为 20%，当进入电压保护后，红色 LED 会以“☆☆,☆☆,☆☆,☆☆.....”持续双闪，若使用 NiMH 电池，请设为“不保护”或自定义保护阀值。

选项 1：不保护

设为不保护时，电调不会因为低压而切断动力。使用锂电时，不建议设为“不保护”，否则电池可能因为放电过度而损坏。比赛时为了避免进入保护状态而导致动力下降，建议设置为“不保护”(但有可能因为过放而损坏电池)。

选项 2：自动

电调自动根据检测到的锂电节数，按 3.5V/Cell 算出对应的低压保护阈值，如检测使用 2S 时，低压保护阈值为 3.5x2=7V。

选项 3：自定义

自定义设置时，ESC 的低压保护阈值范围为 4.0V-7.4V(调整量 0.1V)，这里的电压值是针对整个电池组而言，即总的输入电压。请根据使用电池的节数算出你所需要的低压保护阈值，自定义值可随意设定值，最低可设为 4.0V，最高可设定 7.4V。注意设定值时不可设定超出供电电压上限值。

4. 电调过热保护 (ESC Thermal Protection):

电调温升达到厂方预设特定值时自动关闭输出，且红灯闪烁，直到温度降低才恢复输出。电调过热保护时，红灯闪烁方式为三闪：☆☆☆,☆☆☆，... 警告！若非比赛场合，请勿关闭电调过热保护，否则可能因为过热而损坏电调，并且可能导致电机损坏。

5. **电机过热保护 (Motor Thermal Protection):**
   电机温度上升达到厂方预设特定值时电调自动关闭输出，且红灯闪烁，直到电机温度降低才恢复输出。电机过热保护时，红灯闪烁方式为四闪：☆☆☆☆,☆☆☆☆，... 警告！若非比赛场合，请勿关闭电机过热保护，否则可能毁坏电机并且导致电调损坏。

6. **BEC 输出电压 (BEC Output Voltage):**
   BEC 电压支持 6.0/7.4V 两档可调，一般 6.0V 适用于普通舵机；若使用高压舵机可设置为更高电压，具体设置电压请参照舵机电压标识；警告！设置的 BEC 电压请勿超过舵机最高工作电压，否可能损坏舵机，甚至损坏电调！

7. **正向油门曲线 (Throttle Curve):**
   该参数可调整正向油门摇杆和电调实际输出油门值之间的对应关系。
   默认是为线性的，线性状态下，动力输出跟随油门。

8. **油门中点范围 (Neutral Range):**
   该参数调整油门中点区域范围以适合不同的遥控器和车手操控习惯。有些品质欠佳的遥控器中点位置容易漂移，导致车子缓慢前进或后退，出现此现象时，请把区域宽度设成更大值。

9. **RPM 限速值 (RPM Limit):**
   用于设置电机的最高转速值，该限制值的设定参考相应的比赛规则。
   注意：该限制的转速值是对应的 2 极电机，若是使用 4 极电机，则需要用设定值除以 2 得到对应的实际转速值。例如使用 4 极电机想要得到 20000RPM 的转速，则设定值要设置为 20000x2=40000，所以设置限速值为 40000。

10. 刹车模式 (Brake Control):

刹车模式分为两种：一种为娱乐型缓慢刹车，一种竞赛型手感十足的重刹车。

11. 最大刹车力度 (Max. Brake Force):

本电调提供比例式刹车功能，刹车力度的大小和油门摇杆的位置相关，最大刹车力是指油门摇杆处于刹车极限位置时所产生的刹车力。请根据车辆和赛道具体情况及个人的使用习惯，选择合适的最大刹车力参数。

4 预设模式

为了让一个程序就能快速适用各种应用场合，该电调内预设了 3 组常用模式。一般情况下，客户只需直接调用相关的模式，然后根据不同马达搭配合适的齿比，即可满足一般使用要求，即插即用，而不必 仔细研究各个参数的实际功能。当然用户也可以根据自已的操控习惯及场地等因素更改各个模式的设置。

预设模式适用场合:

模式编号	模式名称	适用场合
1	Blinky	适用于规定电调使用无进角闪灯程序的各类STOCK竞赛
2	1/10 Off-Road	适用于1/10越野/卡车竞赛
3	1/10 On-Road	适用于1/10平路类竞赛

5 编程方法

注意!此电调编程接口为独立编程口;不要使用电调上的油门控制线连接编程盒,否则编程盒无法工作。

LCD 编程盒进行参数设置:(详情请参阅 LCD 参数编程盒说明书)此电调支持使用 LCD 编程盒设置参数,用 3pin 排线将电调和编程盒连通后,然后给电调接上电源,LCD 设定盒将显示出开机界面,按 LCD 设定盒上任意按键,设定盒和电调开始建立通信,并显示“CONNECTING ESC PLEASE WAIT”,等待几秒后,将显示出当前的模式名,随后显示出第一个设置参数。使用“ITEM”和“VALUE”按键即可更改设置参数,按“OK”键可将设置参数存入电调。

6 恢复出厂参数设定

连接 LCD 盒后,通过“ITEM”选择恢复出厂设置“Restore Default”,然后再按下“OK”保存,等待 2s 即可恢复出厂设置。

06 电调状态指示灯 (LED) 说明

1 启动阶段

无控信号，绿灯闪烁1下，同时鸣笛1声

2 行程阶段

低电压，红灯闪烁2下，同时鸣笛2声
ESC过温，红灯闪烁3下，同时鸣笛3声
电机过温，红灯闪烁4下，同时鸣笛4声
电机过流，红灯闪烁5下，同时鸣笛5声

07 故障快速处理

故障现象	可能原因	解决方法
上电后指示灯不亮，电机无法启动，风扇不转	1. 电池电压没有输入到电调 2. 电调开关损坏 3. 电调正负极接反	1. 检查连接线是否有不良，焊点是否不良 2. 更换开关 3. 调整正负极
上电后电机无法启动，发出“哔一哔一，哔一哔一”警示音且伴有红灯闪烁(每组双音间隔时间为1秒)	电池组电压不在正常范围内	检查电池组电压
上电后，锂节检测后(绿灯快闪后，绿灯一直单闪，并且电机发出一声鸣音)	1. 电调未检测到油门信号 2. 电调油门中点与遥控器不匹配	1. 检查油门线是否插反、通道是否插错、控是否有开启 2. 油门摇杆归中位，重新校准油门行程
遥控器正向加大油门，车子反而倒退	该车架同主流车架的电机转向不一致	把电机转向设置设为“CW顺时钟”
电机转动过程中，突然停转或功率输出显著降低	1. 接收机遇到干扰 2. 电调进入电池低压保护状态 3. 电调进入过温保护状态	1. 检查接收机出现干扰的原因，检查发射机器电池电量 2. 红灯间隔闪烁2次为电压保护，请更换电池

		1. 红灯间隔闪烁3次为温度保护，请等电调\电机温度降低后继续使用
电机抖动，无法启动	电调和电机连接的插头有虚焊或AC线互换 电调故障(部分功率管MOSFET烧坏)	1. 检查各焊接点，必要时重新焊接，AC线互换 2. 联系购货商处理维修事宜
前进正常，但无法倒车	1. 遥控器油门通道中点偏离到刹车区域 2. 参数项“运行模式”设置错误 3. 电调损坏	1. 重新校调油门通道中点，使遥控器油门摇杆置于中位时，电调上的指示灯不亮 2. 参数项“运行模式”需设置为“正反转带刹车” 3. 联系购货商处理维修事宜
连接LCD参数设定盒，一直显“CONNECTING ESC"	1. 未正确使用电调编程接口 2. 电调油门未归零	1. 使用正确的接口连接LCD设定盒 2. 将电调重启后重新连接LCD参数盒
设定油门行程时，按下SET键设中点时，绿灯不闪且无 “哔”音，或设完中点后，无法设置正向及反向最大点	1. 电调油门线未插到接收机正确的通道 2. 电调油门线插反 3. 油门正反向行程设定没有设置到100%	1. 将油门线插到接收机标示的TH通道 2. 查看接收机标示顺序正确插入 3. 油门正反向行程设定为100%

CREST RS80

CAYOTE TEAM